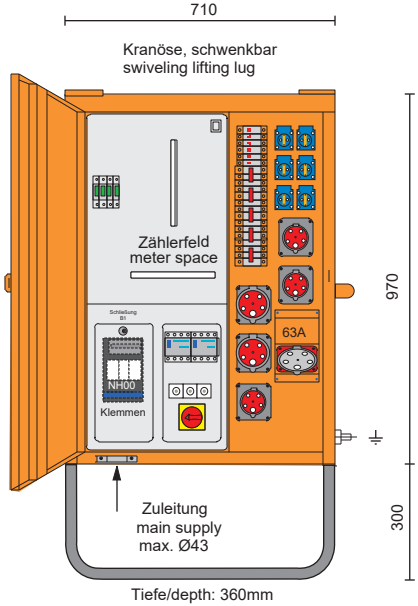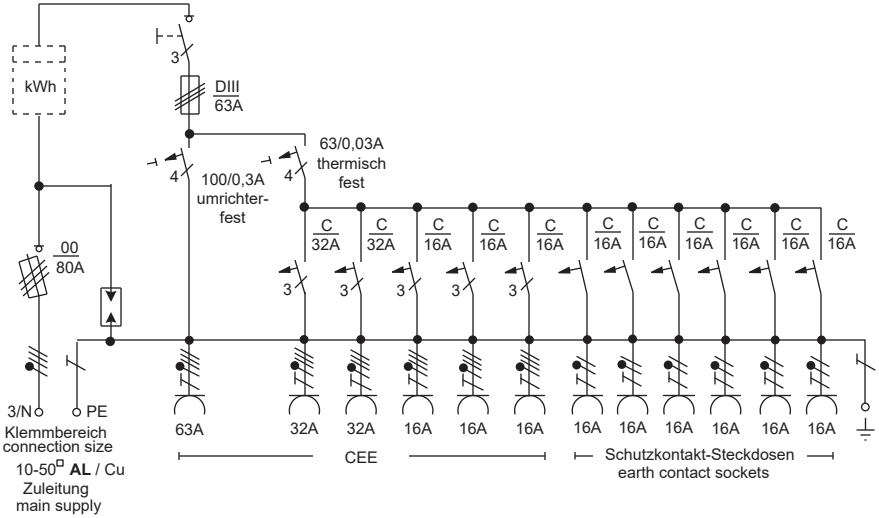Typ: **M-AVEV 63/321-6/UR2/A/Burgenland** **Art.Nr.:** **690100033**